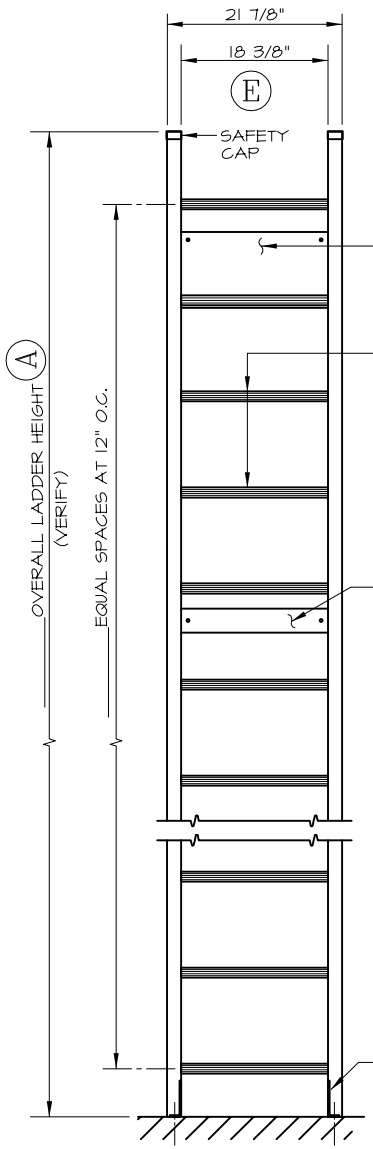

FRONT ELEVATION

N.T.S.

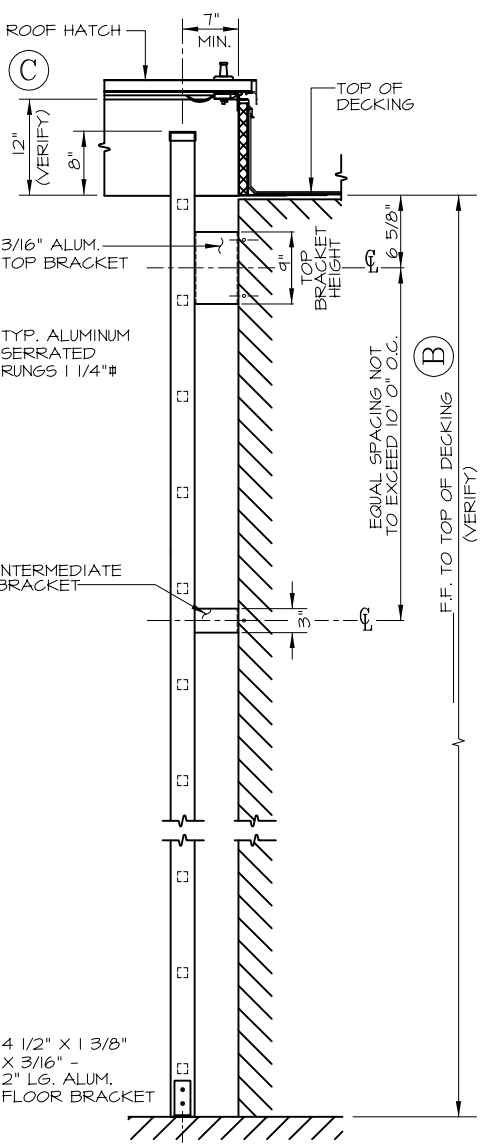

SIDE ELEVATION

N.T.S.

CONTRACTOR TO VERIFY:

(A) _____ OVERALL LADDER HEIGHT

(B) _____ F.F. TO TOP OF DECKING

(C) _____ ROOF HATCH BASE HEIGHT

(D) _____ WALL TO ℄ OF LADDER

(E) _____ LADDER WIDTH

APPROVED BY: _____

DATE _____

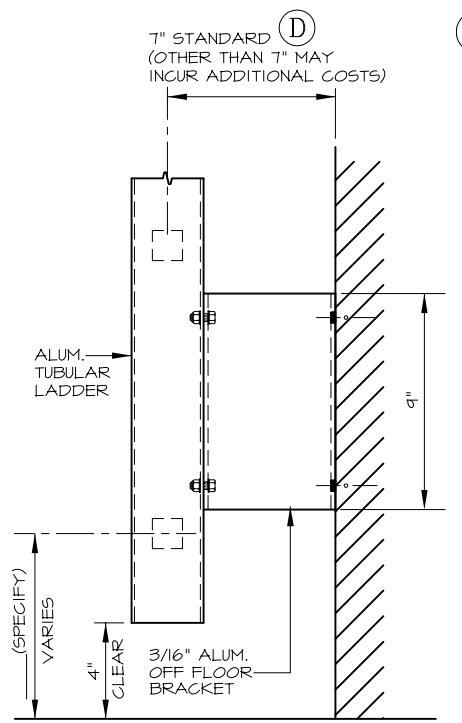

ALTERNATE OFF FLOOR SUPPORT

1 1/2" = 1' - 0"

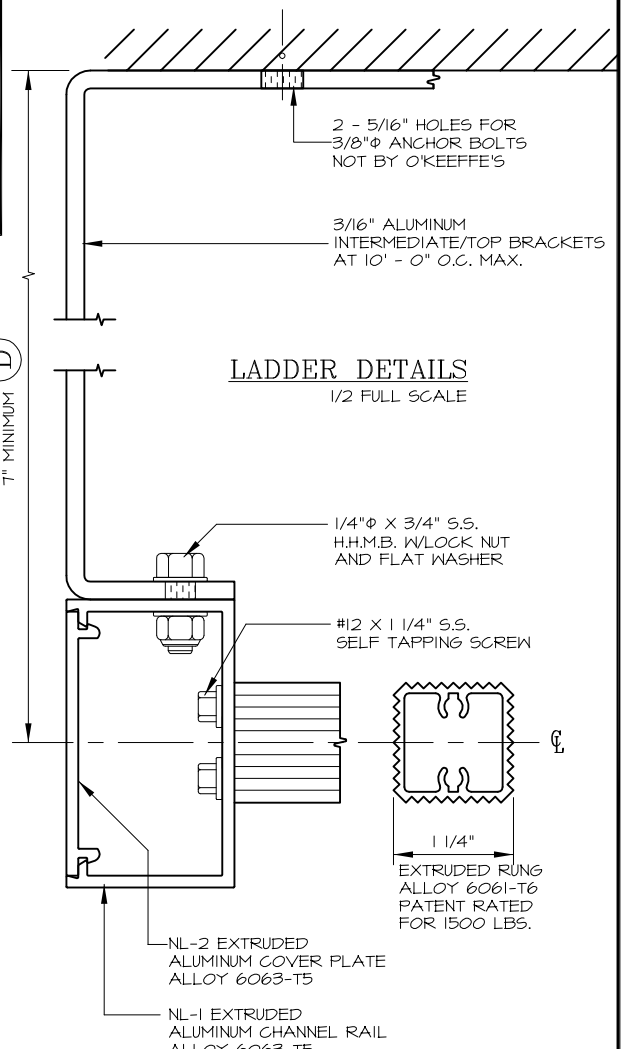

LADDER DETAILS

1/2 FULL SCALE

O'KEEFFE'S, INC.
www.okeeffes.com
TEL: (415) 824-4900
FAX: (415) 824 5900

HEAVY DUTY TUBULAR RAIL

FIXED ACCESS ALUMINUM LADDER MODEL 501

_____ QUANTITY

☐ SAFETY POST

☐ INTERMEDIATE BRACKET

☐ ALTERNATE BOTTOM SUPPORT

☐ MILL FINISH

☐ POWDER COATING

☐ BRONZE ANODIZED

☐ CLEAR ANODIZED

SALE NO.

DRAWN :

DATE :

SHEET : _____ OF _____