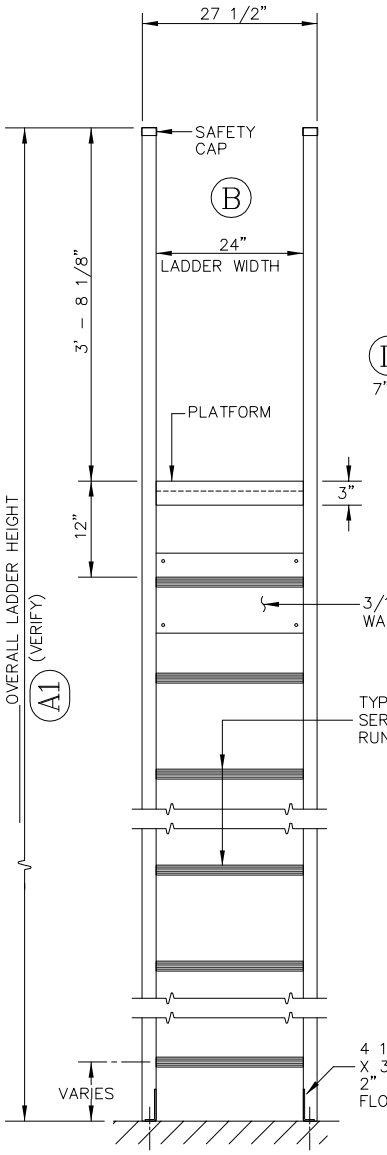

FRONT ELEVATION
N.T.S.

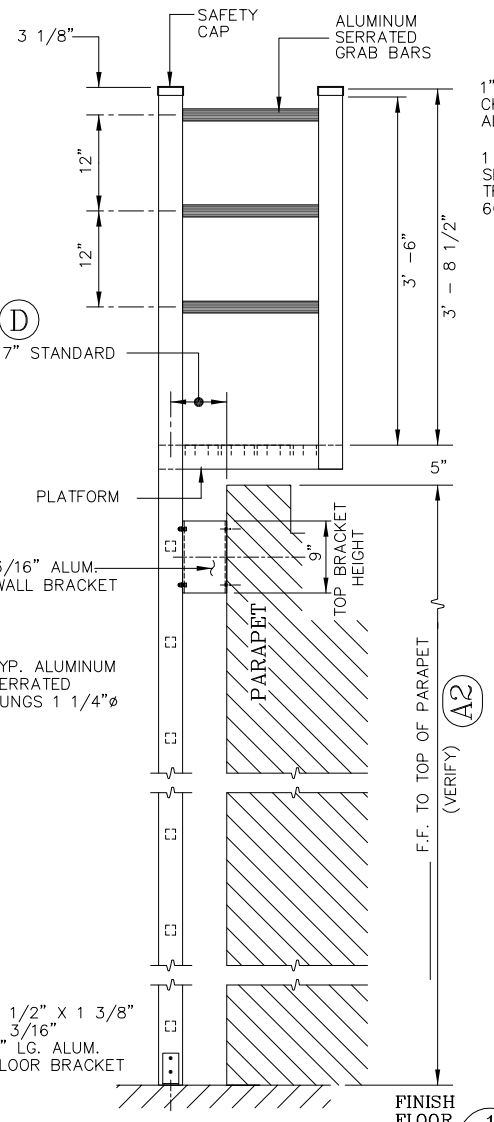

SIDE ELEVATION
N.T.S.

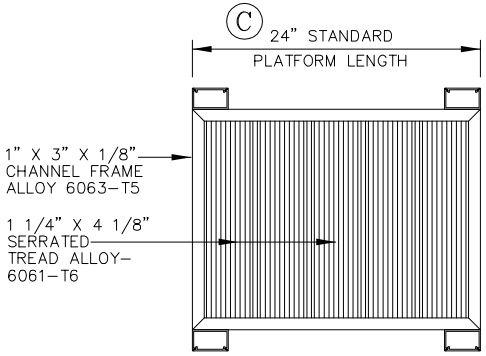

PLATFORM PLAN
N.T.S.

CONTRACTOR TO VERIFY:

A1 _____ OVERALL LADDER HEIGHT
A2 _____ F.F. TO TOP OF PARAPET
B _____ LADDER WIDTH
C _____ PLATFORM LENGTH
D _____ WALL TO ℄ OF LADDER

APPROVED BY: _____

DATE _____

PLEASE SIGN

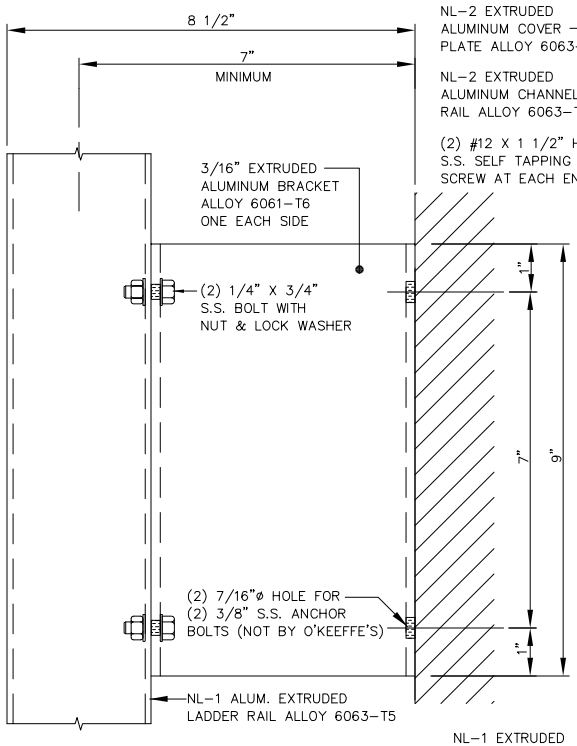

1/2 OFF FLOOR/TOP BRACKET SIDE VIEW
3'=1'-0"

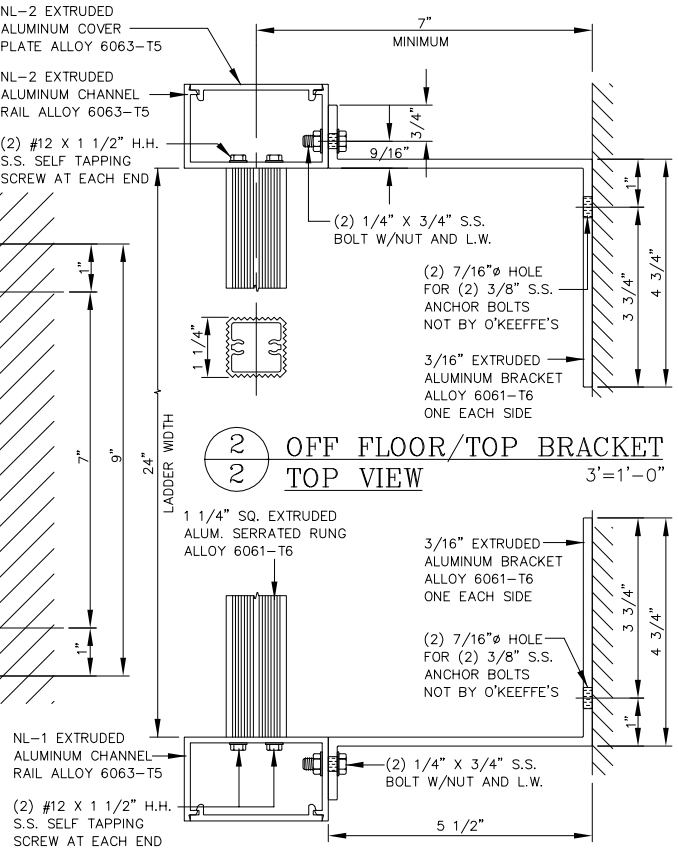

2/2 OFF FLOOR/TOP BRACKET TOP VIEW
3'=1'-0"

O'KEEFFE'S, INC.
100 N. HILL DR. SUITE 12
BRISBANE, CA 94005-1010
TEL: (415) 824-4900
FAX: (415) 824-5900

TUBULAR RAIL LOW PARAPET ACCESS LADDER
ALUMINUM LADDER WITH PLATFORM MODEL 503A

_____ QUANTITY
☐ SECURITY DOOR
☐ INTERMEDIATE BRACKET
☐ ALTERNATE BOTTOM SUPPORT
☐ MILL FINISH
☐ POWDER COATING
☐ BRONZE ANODIZED
☐ CLEAR ANODIZED

SALE NO.
DRAWN :
DATE :
SHEET : _____ OF _____